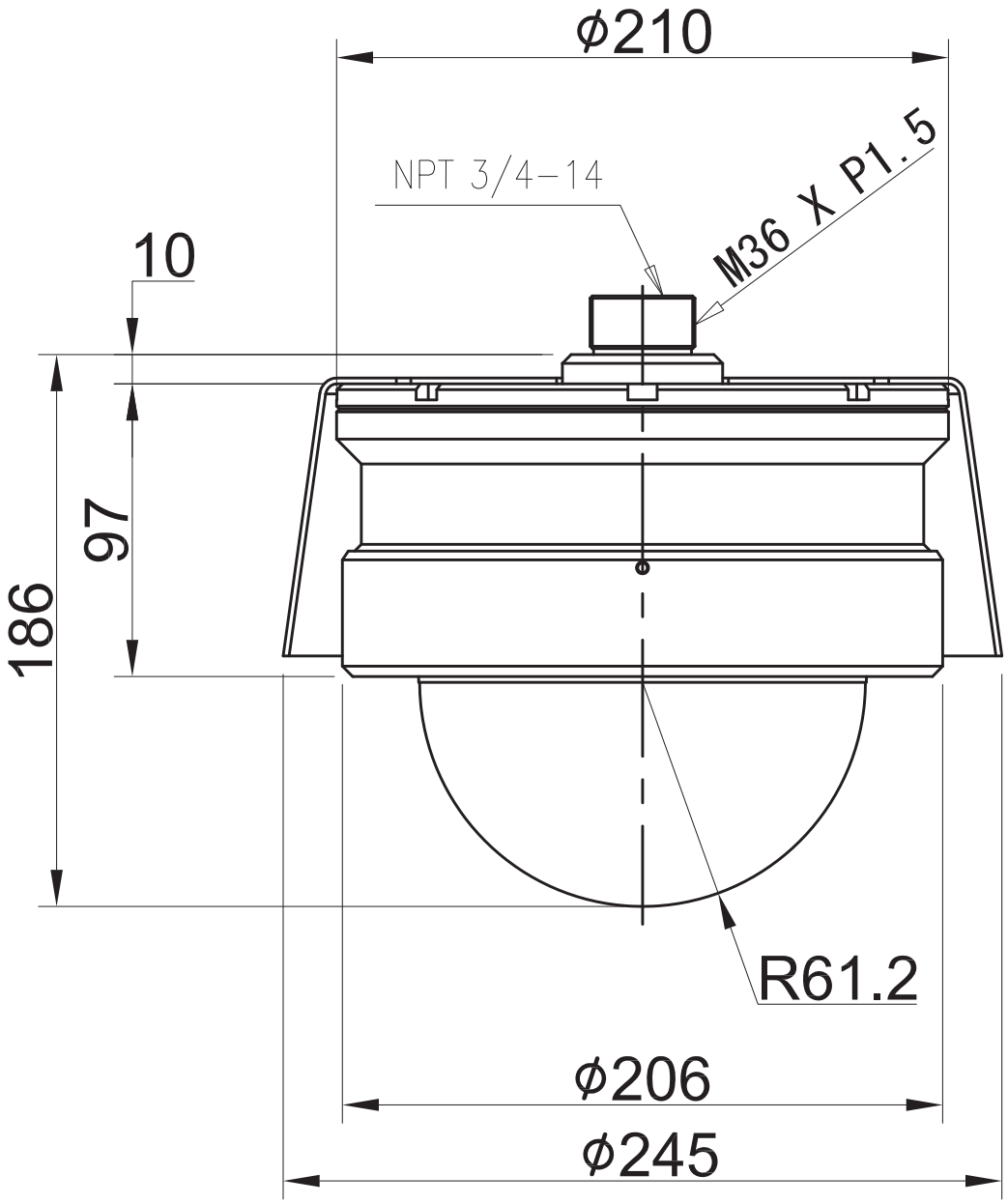
ϕ210
NPT 3/4-14
M36 X P1.5
10
97
186
R61.2
ϕ206
ϕ245